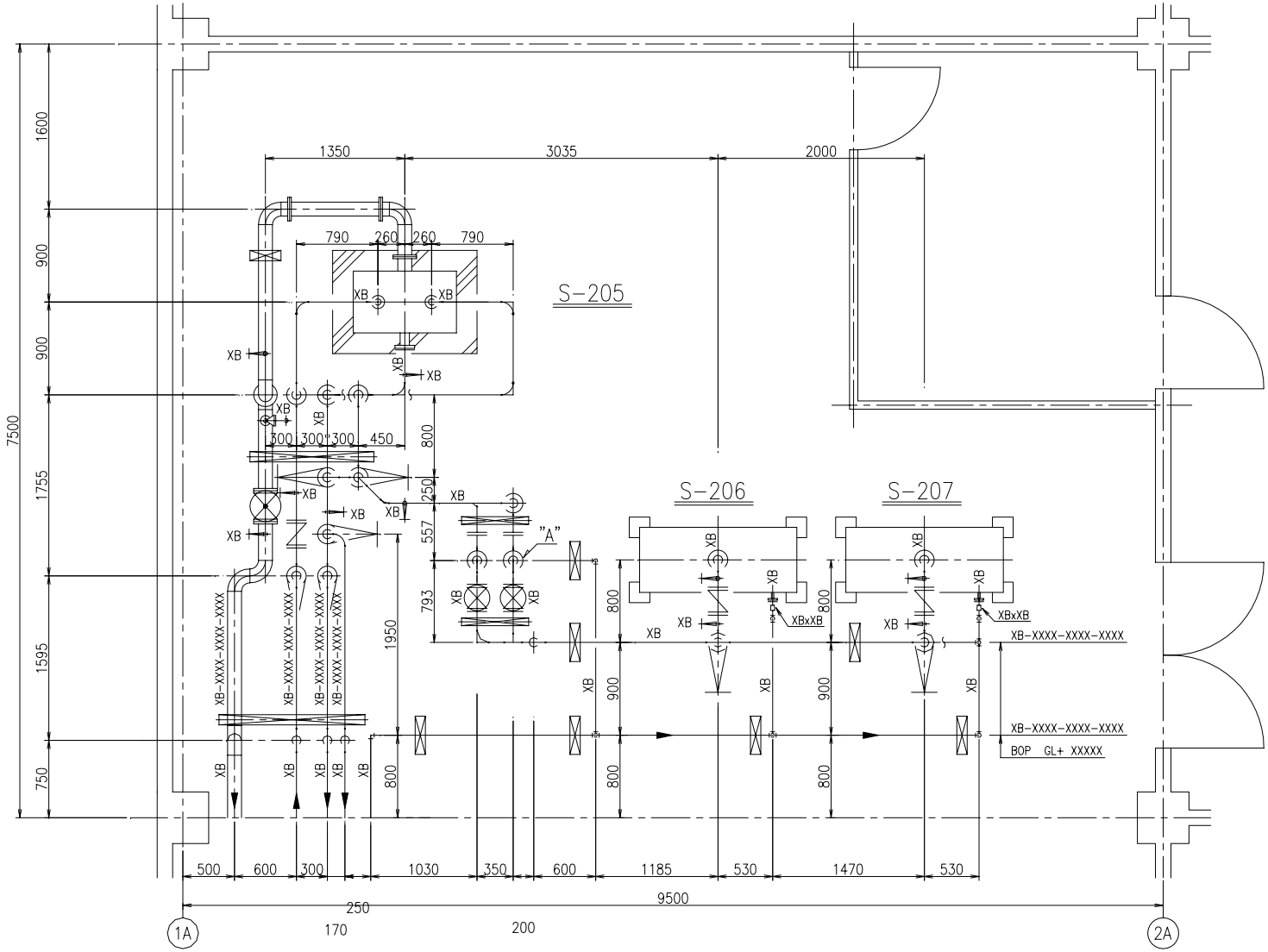
S-205
S-206
S-207
"A"
XB
XBxXB
XB-XXXX-XXXX-XXXX
BOP GL+ XXXXX
1350
3035
2000
790
260
260
790
300
300
300
450
800
250
557
793
1950
1600
900
900
1755
1595
750
7500
500
600
300
1030
350
600
1185
530
1470
530
9500
250
170
200
1A
2A

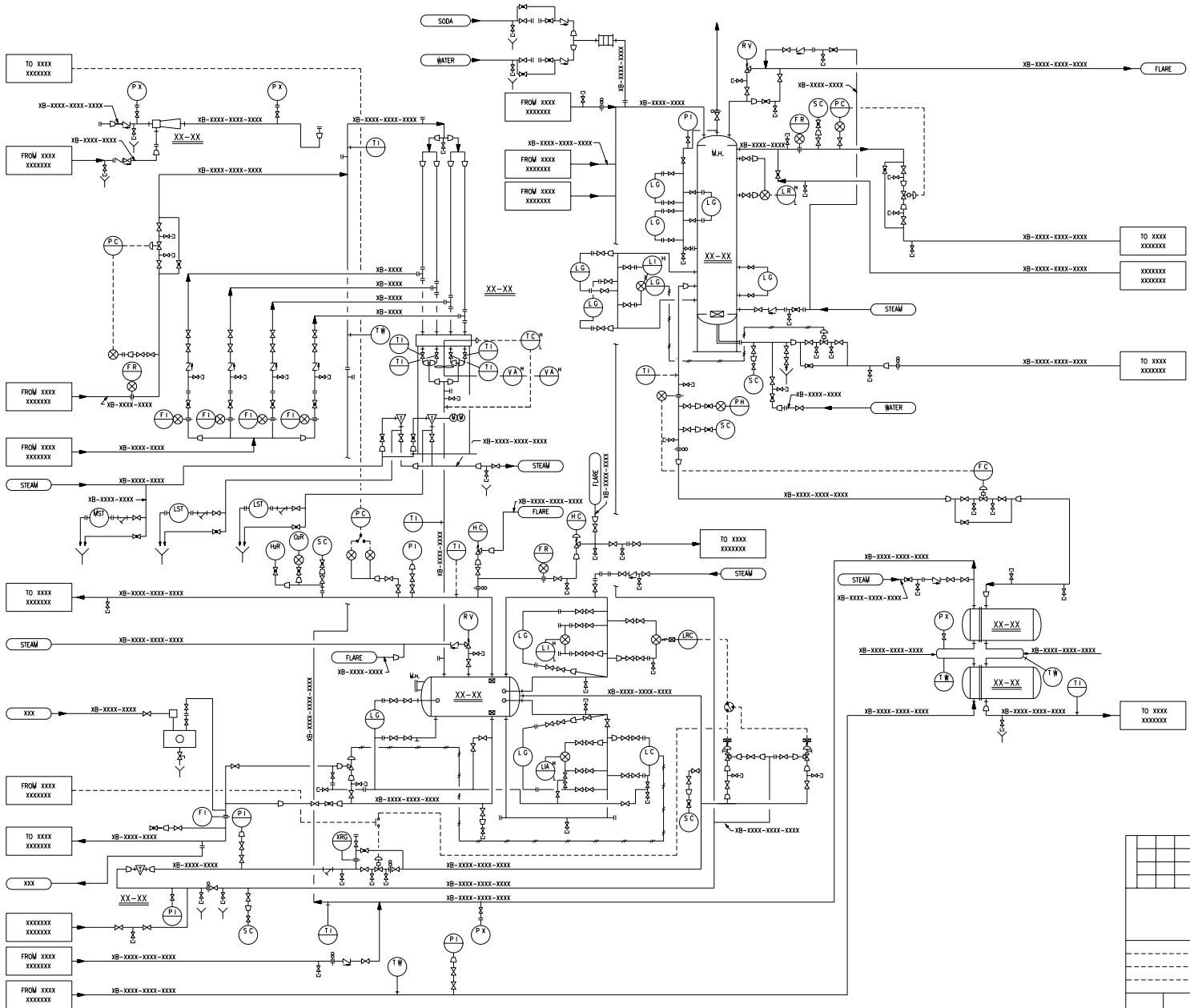
SODA
WATER
FROM XXXX XXXXXXX
TO XXXX XXXXXXX
XXXXXXX XXXXXXX
FLARE
STEAM
XB-XXXX-XXXX-XXXX
XX-XX
XXX
M.H.

P&ID